Pure & Appl. Chem., Vol.50, pp. 743-758. 0033-4545/78/0801-0743 $02.00/0
Pergamon Press Ltd.1978. Printed in Great Britain.
© IUPAC

CONTEMPORARY PERSPECTIVES IN PHYSICAL CHEMISTRY

Charles A. McDowell

Department of Chemistry, The University of British Columbia,
2075 Wesbrook Place, Vancouver, British Columbia, V6T 1W5
Canada

Abstract - Physical Chemistry has undergone a renaissance in the past few years because of the introduction of many new techniques. Many of these novel advances rely on the application of electronic developments, or the application of newer computing methods. In addition the introduction of lasers has led to a number of important developments which are likely to have a lasting impact on the whole field of Physical Chemistry.
Of the areas which owe most to developments in electronics and computing techniques we discuss some important advances in (a) electron and photoelectron spectroscopy; (b) magnetic resonance techniques, particularily those involving multiple-pulse techniques and multiple-quantum transitions; and (c) pico-second time resolved phenomena which have led to interesting developments in the study of vibrational energy transfer, relaxation phenomena, and very fast reactions.
Lasers have given rise to new areas of spectroscopy based on two quantum and multiple-quantum transitions. The use of dye lasers has led to several important new advances. Laser photochemistry, particularily, the observation of multiple-quantum photodissociation of molecules has opened up new exciting areas for study. Many of these studies have presented important new possibilities for the photochemical separation of isotopes.
Many interesting double resonance techniques have led to many new important details about molecular structure and have considerably increased the sensitivity and range of spectroscopic methods. Those which are discussed in this lecture include laser magnetic resonance spectroscopy and laser microwave optical double resonance.

When the organizers of this Congress wrote to me some considerable time ago inviting me to present an opening lecture in the Physical Chemistry Section, I hesitated for some time before accepting the invitation. In the meantime, Professor Nagakura sent me a brief outline of the various topics which were to be discussed in this session. After surveying the range of topics to be discussed, it was with some trepidation that I finally decided to accept the invitation.

The reason for my concern will be obvious to anyone who has attempted to follow closely the developments in Physical Chemistry during the past several years. A decade or so ago, Physical Chemistry seemed to have reached a point when the subject seemed to be well defined and fairly settled. Then, suddenly, there was the introduction of lasers and at the same time there came considerable developments in the application of computers, and also the application of various pulse techniques for measuring very fast processes. These new developments have completely revolutionalized the subject, so that we have had during the past five years or so, a complete revitalization of the whole field of Physical Chemistry. Not only have new areas of activity developed, but many older areas have been rejuvenated by the introduction of these new experimental techniques.

In attempting to survey these many interesting new developments I have, of course, been forced to read more carefully the recent literature. That discipline has been a most rewarding educational experience for me, and to that extent I am grateful to the Organizing Committee for causing me to be a more diligent student.

In this lecture I propose to make a quick survey of the more exciting recent and novel developments in various areas of Physical Chemistry. After that I shall deal in a little more detail with certain topics which seem to me to be most likely to lead to significant advances in the immediate future. In doing this I am, of course, mindful that I may omit some topics, and areas of the subject, which will seem to be of great importance to some persons. That some will be disappointed because the topic of their interest is omitted is inevitable. I am most conscious that to some extent I am in the position of the guest at a very large and beautiful buffet-style banquet, who having made his choice of the delicacies which appeal to him reaches the end of the buffet table to find some of the chefs staring at the guest's plate and exclaiming loudly, "But you have not chosen my favourite speciality".

Now may I offer by way of the hors d'ouvre, a quick survey of some important and novel developments in chosen areas of Physical Chemistry. In the area of Molecular Spectroscopy the introduction of lasers has changed that field completely. There have been developed new methods which have led to ultra high resolution spectroscopy; and even to spectroscopy without spectrographs or spectrometers! In addition, many multiple resonance techniques and multi-photon techniques have been developed. Whole new areas of spectroscopy have been revitalized. For example, some years ago it seemed that we had reached almost the limits of resolution in molecular spectroscopy, both in the ultra violet and in the infrared regions. In many cases Doppler broadening was the limiting factor determining the resolution which could be obtained by using the then available high resolution spectrographic methods. Various molecular beam techniques enabled certain Doppler spectra to be measured but the method is rather difficult to apply in many cases. The introduction of lasers and the discovery of multi-photon spectra, as well as various double resonance techniques, has led to the development of a Doppler free spectroscopy which presents us with the possibility of ultra high resolution studies widely applicable in both atomic and molecular spectroscopy. The extent to which the realizable resolution of spectra lines has been enhanced by the introduction of these newer methods is shown in Fig. 1.

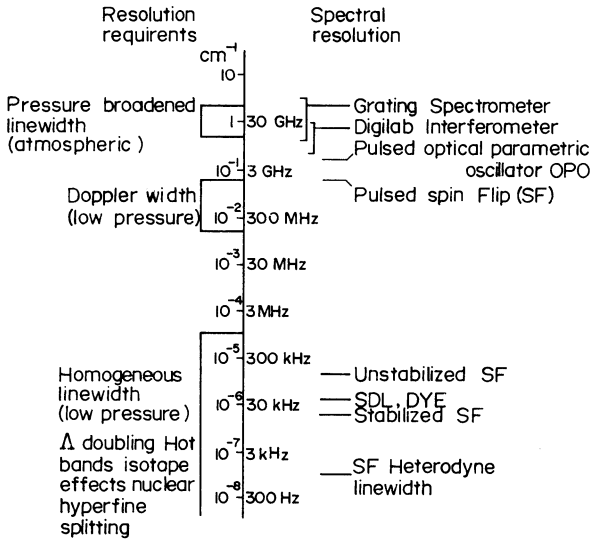

Fig. 1 Resolution requirements and attaincble resolution from conventional instruments and tunable lasers.

Considerable improvements in the design of electron energy analysers have led to much higher resolution studies in Photoelectron Spectroscopy and Electron Spectroscopy. Both of these methods continue to yield results of importance in the study of molecular structure, both in the gaseous phase and in the solid state. Other interesting developments have occurred with Auger Spectroscopy and in the applications of Penning Ionization methods. Later I shall discuss some recent developments in the application of photoelectron spectroscopy to the study of free radicals and transient molecules, and the application of newer methods of electron spectroscopy to the study of ionization phenomena in gaseous molecules, and in particular, to the study of inner

shell excitation, and the determination of binding energies and momentum distributions of valence electrons which have been carried out in our Department.

Multi-photon techniques have also been of great importance recently in the study of photoionization phenomena, and these will undoubtedly lead to interesting developments in photoelectron spectroscopy. In the latter field, use of various types of lasers has led to many interesting new studies, not only of the photo-decomposition of molecular ions, but also a new area, Laser Detachment Photoelectron Spectroscopy. These studies have given us much new spectroscopic information concerning the energy levels and the structure of molecular ions. In addition, this latter technique has led to the very precise determination of electron affinities of a large number of radicals and molecules.

We have also seen important developments because of new discoveries in the area of Raman Spectroscopy. Laser Raman Spectroscopy has, of course, been an important new area of study, but in addition, newer Raman effects, such as Coherent Anti-Stokes Raman Spectroscopy have already become most important. Moreover, a new type of laser, called a Spin Flip Raman Laser, promises to lead to ultra high resolution infra-red spectroscopy, particularly when it is combined with optical-acoustical detection. A listing of the more important developments in this field from a physical chemistry viewpoint, is given in Table 1, shown on the following page. Of the topics listed in Table 1, we shall later discuss in more detail only two, namely, Coherent Anti-Stokes Raman Scattering (CARS) and the Spin Flip Raman Laser. Both of these will obviously be of great importance in Physical Chemistry.

TABLE 1. Developments in Raman scattering

Laser Resonance Raman Spectroscopy Inverse Raman Effect
Coherent Anti-Stokes Raman Scattering (CARS)
Coherent Stokes Raman Spectroscopy CSRS (SCISSORS)
Higher Order Raman Spectral Excitation Studies (HORSES)
Stimulated Raman Emission
Slip Flip Raman Laser (SFRL)

In the field of Chemical Kinetics, it is clear that great progress has been made studying the details of collision processes in gas phase reactions. Already there is much knowledge on a microscopic scale concerning the exchange of vibrational and rotational energy and the details of interactions and reactions in various chemical processes. Many of these researches are of considerable importance for the development of chemical lasers, a field in which there is at present tremendous activity. Our understanding of reaction dynamics from features of a potential energy surface has improved greatly in recent years. With simple systems such as $X+H_2$ accurate calculations of the potential energy surfaces are possible (Ref. 1), and molecular beam experiments provide accurate values for the angular (Ref. 2), and energy distribution (Ref. 3), which can be explained satisfactorily by the existing theories.

Most modern work has shown the importance of "sticky" intermediate complexes, e.g., I_2F in biomolecular reactions such as $F+I_2 \rightarrow IF+I$. These have been identified in the gas phase by using mass spectrometric techniques (Ref. 4).

There are now available two different methods using crossed molecular beams for obtaining information about the stability of these collision complexes, the study of which is likely to be of considerable importance. The first method is to study the lifetime of the complex by measuring the angular distribution of the products. The second method involves the synthesis of the radical molecules through erdoergic molecule-molecule reactions (Ref. 5).

The development of Picosecond Techniques has, of course, given us a method for studying very fast chemical reactions and processes particularly in the liquid phase. Not only has this been of great importance in studying relaxation processes in chemical systems, but it has also led to many interesting and important new developments in various branches of Physical Chemistry and Biophysics.

Apart from the obvious use of picosecond techniques in measuring the rates of ultra fast reactions, there are other important applications in chemistry. One of these is the study of the degradation of energy within a molecule.

Because many of these energy exchange processes occur so very rapidly and lie within the picosecond time domain, it is obvious that there are likely to be important developments from studies using these ultra fast measuring techniques.

In the case of photodissociation processes in liquids, there arises the well known 'cage effect'. Studies of the photodissociation of I_2 in various solvents using picosecond techniques have yielded much new information. An important finding was the first direct observation of the dynamics of a collision-induced predissociation in the liquid state with a pseudo-first-order constant $\sim 10^{11} sec^{-1}$ (Ref. 6).

Charge-transfer processes and the subsequent energy dissipation are important processes in chemistry. Picosecond studies on the anthracene diethyl aniline systems provide new views of the electron-transfer process and test theories of diffusion-controlled chemical processes (Ref. 7). It is also shown by these studies that there are strong geometrical requirements for electron transfer in non-polar solvents. Time dependent fluorescence depolarization measurements in the picosecond domain have been used by Fleming et al. (8) for the direct observation of the rotational diffusion of molecules. Picosecond methods have been applied to study the kinetics of the photosynthetic process (Ref. 9). Much progress has been made in unravelling the details of the photosynthetic reaction centre of bacteriochlorophyll, particularly those reaction processes which occur in times 5 picoseconds after the primary stimulus.

Magnetic Resonance Spectroscopy continues to be an area in which there is much innovation. Numerous multi-resonance techniques have been introduced and these have led to the solution of many problems in Molecular Structure and to the measurement of various relaxation processes of interest in all aspects of physical and biophysical chemistry. These new techniques have also had some important applications in chemical analysis. Multiple resonance techniques have been found to be widely applicable in Electron Paramagnetic Resonance, Nuclear Magnetic Resonance as well as in Nuclear Quadrupole Resonance Spectroscopy. We thus now have Electron-Electron Double Resonance (ELDOR), Electron-Nuclear Double Resonance (ENDOR) and Internuclear-Nuclear Double Resonance (INDOR), etc.

The continued application of pulse techniques deriving from the work of Hahn (Ref. 10), Carr-Purcell (Ref. 11), and Meiboom and Gill (Ref. 12), has led not only to important methods for the determination of relaxation mechanisms and relaxation times, but with the introduction of fast Fourier transform techniques has led to a whole new method, namely Fourier Transform Nuclear Magnetic Resonance Spectroscopy. This will continue to have many important applications in all branches of chemistry.

Perhaps the development of new methods for high resolution NMR of solids represent some of the more important recent developments. The perfection of certain of these newer methods will undoubtedly have a great impact on our subject. Earlier methods based on the high speed spinning of samples at the so-called 'magic angle' (Ref. 13) seem recently to be replaced by multiple pulse methods followed by Fourier transform techniques. The most promising of these seems to be the four pulse sequence introduced by Waugh, Huber and Haeberlen (Ref. 14) which is sometimes jocularly called the Wahuha sequence.

The increased availability of superconducting magnets together with double resonance techniques has led to the development of the proton-enhanced NMR method (Ref. 15) which has permitted the observation of ^{13}C resonances in natural abundance in organic solids. The application of this method has been developed by Haeberlen et al. (16) and extended not only to ^{13}C measurements but also to protons. An important new method called High-Resolution Fourier-Transform Double-Quantum Magnetic Resonance Spectroscopy has been introduced by Pines et al. (17). This double quantum method has already been successfully applied to obtain measurements of the chemical shift of deuterium atoms in organic single crystals.

Here we may perhaps also mention the introduction of Laser Magnetic Resonance Spectroscopy (Ref. 18), which has proved to be of considerable importance in the study of the structure of free radicals in the gas phase. We shall discuss this topic in more detail later.

Because of the development of ultra-high vacuum techniques and their applications there have been impressive advances in the field of Surface Chemistry.

These new ultra-high vacuum techniques ($\sim 10^{-11}$ torr) have led to the introduction of Low Energy Electron Diffraction (LEED) and Auger Spectroscopy, as well as the application of the methods of photoelectron and electron spectroscopy to the study of very clean surfaces. There are now so many different techniques available for the experimental investigation of surfaces that it is literally impossible for any single person to discuss them adequately. Because of this variety of techniques this field has itself something of an acronymic dictionary.

The results of LEED and Auger studies show markedly different adsorption structures for the same gas adsorbed on different crystal faces of a material. The presence of surface steps has been shown to have an important influence on the nature of the reactions which occur after chemisorption.

The technique of Extended X-ray Absorption Fine Structure (EXAFS) has recently been applied to surfaces and is seen as an ideal complement to LEED. The advantage is that while LEED characterizes the overall symmetry of the surface structure, EXAFS can quantitatively reveal details of the local structure around a given atom. A technique has recently been developed which enhances the sensitivity of EXAFS for surface studies. This involves measuring the Auger electrons as a function of the X-ray photon energy. This new technique has not only led to results of considerable interest and significance, but has added a new aeronym, namely, SEXAFS.

Raman scattering processes

In this section of the paper we shall deal in a little more detail with some specially selected topics. These have been chosen as representing some of the more interesting and important developments in recent times and are techniques which seem likely to have profound impact on many facets of Physical Chemistry. Of the many interesting developments which we mentioned as having taken place in the field of Raman Spectroscopy, we draw attention to two of the techniques which have novel features and such special properties that they seem likely to lead to interesting new developments in the field of Physical Chemistry. These two phenomena are: (a) Coherent Anti-Stokes Raman Scattering (CARS), and, (b) the Spin Flip Raman Laser.

Coherent anti-Stokes Raman scattering (CARS). As is well known, Raman scattering is an incoherent process, but Coherent Anti-Stokes Raman Scattering (CARS) is a four-wave mixing process which arises from the parametric nature of this process. The advantage over the normal spontaneous Raman scattering is that the scattered light in a CARS experiment is well collimated, and its intensity some 5 to 10 orders magnitude greater than the normal Raman scattering process. The transitions leading to Coherent Anti-Stokes Raman Scattering are illustrated in the diagram shown below. The scattering process is initiated by a pulsed tunable laser and interference filters permit the Anti-Stokes pulses of frequency $\omega_4 = (2\omega_1 - \omega_2)$ to be transmitted (Ref. 19). A schematic diagram of the experimental arrangement is shown in the following Fig. 2. Because of the intensity of the CARS lines, (in the case of nitrogen they have in fact been seen by the unaided human eye), the technique is immediately aplicable to the determination of low concentrations of compounds. In that regard it might be important as a non-destructive method for the analysis of biological as well as ordinary materials (Ref. 20). Another advantage is, of course, the enhanced resolution obtainable in a CARS experiment because the laser linewidth can produce to approximately 15 MHz. Because of this resolution precise measurements of rotational vibrational frequencies can be made on molecules for which the relevant data are not available from microwave spectroscopy. Already the technique has been applied to study temperature distributions in flames, and also for the analysis of combustion processes (Ref. 21).

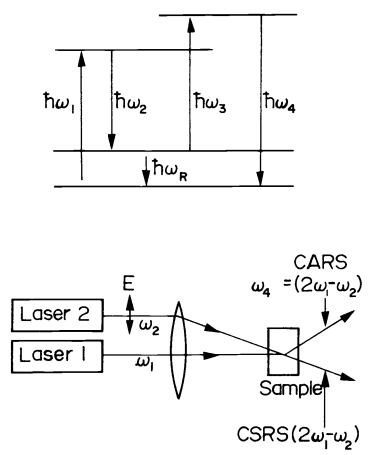

Fig. 2 Coherent Anti-Stokes Raman Spectroscopy CARS

The use of synchronized picosecond pulsed lasers in a CARS experiment enables this method to measure relaxation processes with high accuracy.

Although we have made reference above to the use of pulse techniques in obtaining the CARS radiation, recently c.w. lasers have been used, and in that case the two-branched spectrum of atmospheric pressure nitrogen was recorded in 10 ml/sec.

Spin flip Raman laser. The process of stimulated spin flip Raman scattering by conduction electrons in semiconductors, in particular InSb, has led to an important new spectroscopic method which continues to show that it is likely to be of considerable importance. The Raman scattering process for the spin flip excitation is not markedly different from the ordinary Raman scattering. In the spin flip Raman process the spin of a conduction electron in a semiconductor is reversed with respect to an external supplied magnetic field H. Figure 3 shows an idealized representation of the spin flip Raman scattering. The wavelength of the scattered radiation is magnetically tunable since the energy of the magnetic excitation given by the spin reversal process is dependent upon the value of the applied field H by the equation:- $h\omega_e = |g^*|\beta H$, where β is the usual Bohr magneton, eh/2 MC, but the effective conduction electron g factor, g*, is no longer ∿2 in a crystal environment. In the semi-conductor InSb the strong spin-orbit interaction and small energy gap led to g* values as large as -50. This large g* factor in InSb means that the scattered radiation output is tunable over a range of about 160 cm^{-1} for field strengths up to 10 T, or about 60 MHz per gauss. The spin flip Raman laser is therefore a tunable infra-red source and provides an alternative to other non-linear processes, such as parametric osulation and frequency mixing.

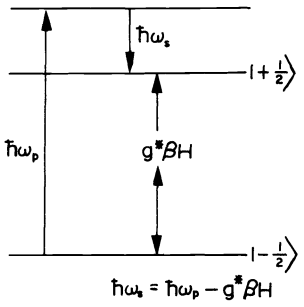

Fig. 3 Idealized energy level diagram for Spin-Flip Raman Scattering

Even with its normal resolution, tunable spin flip Raman spectroscopy has enormous potentiality. Doppler limited spectra can be obtained which reveal Λ-doubling, and nuclear quadrupole splittings in NO (Refs. 22,23). In addition, using the optical acoustic detection method, mentioned below, it has been possible also to study the Zeeman spectroscopy of the v = 1→2 vibrational-rotational transitions of the $^2\Pi_{1\,2}$ and $^2\Pi_{3\,2}$ states of NO. High resolution spectra of other molecules such as OCS, SbH_3, H_2O, etc. (Ref. 22) and C_2H_4 (Ref. 24) have also been obtained. That this technique can be used for ultra-high resolution studies has been demonstrated by Patel (25), who studied the saturation spectroscopy of water vapour and observed Lamb-dip width of the order of 200 kHz, a resolution of $\sim 3\times10^8$.

A typical experimental arrangement for the use of a c.w. spin flip Raman laser in molecular spectroscopy is shown below in Fig. 4.

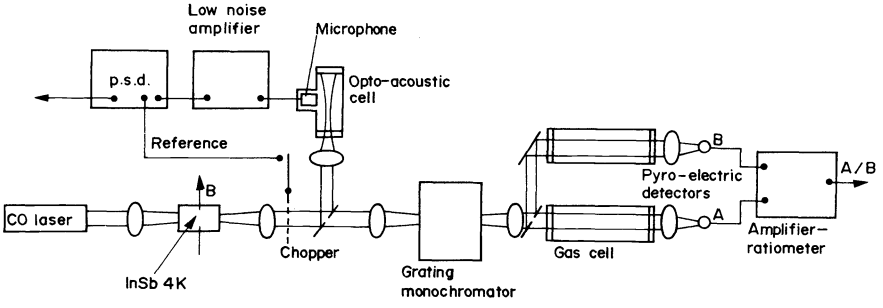

Fig. 4 Schematic diagram of the c.w. spin-flip Raman laser and the arrangement used for molecular spectroscopy.

Two different types of detection are commonly employed. In the double beam arrangement the radiation from both beams is focussed on pyroelectric detectors and the ratio of the signal recorded. Optical-acoustical detection can also be employed with considerable advantage. This latter is made possible because of the large spectral brightness of the SFRL, conservatively estimated as a factor of 10^{10} times above that from a conventional black-body source. This technique is particularly useful as it discriminated against amplitude

fluctuations in the SFRL output because it responds only when the molecules absorb the radiation. Patel and Kerl (26) have recently described a novel miniature optical acoustical cell which can measure absorption coefficients of $\sim 10^{10}\,cm^{-1}$. With this new cell and a SFRL spectrometer, they could detect NO concentrations as low as 1.0×10^{7} molecules cm^{-3}.

A tunable 5-μm spin flip Raman laser and a carbon monoxide laser have been set in a narrow wave guide to perform two-photon absorption spectroscopy on the NO molecule (Ref. 27). Coherent two-photon Doppler-free absorption (see later) and stepwise multiphoton absorption were observed. Measurements of the Λ doublet splitting was readily accomplished and very narrow Doppler free resonances of $\nu = 0$ to $\nu = 2$ were observed.

Multiphoton transitions

Two-photon transitions. The simultaneous emission or absorption of two photons of the same frequency is generally known as a two-photon transition. Simultaneous absorption or emission of two photons of different frequencies is sometimes also called a two-photon transition, and at other times a double-quantum transition. The theory of two-photon transitions was given first by Göppert-Meyer in 1931. She showed that from second-order perturbation theory, the probability amplitude for two-photon absorption from level 1 to level 2 (Fig. 5), when an atom, or molecule, is excited by radiation at frequency ω, about half the value of $\omega_0 = (\omega_2 - \omega_1)/\hbar$ is given by

$$a(t) = \frac{h^2}{2}\sum_j \frac{x_{2j}\,x_{j1}}{\omega_j - \omega_1 - \hbar\omega}\;\frac{e^{i(\omega_0 - 2\omega)t} - 1}{\omega_2 - \omega_1 - 2\hbar\omega}$$

where j represents all of the possible intermediate states.

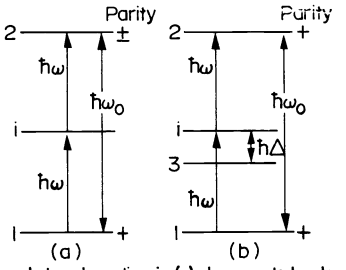

Fig. 5 Two-photon absorption in (a) degenerate levels, and (b) nondegenerate levels.

When all the j levels are distant from the virtual intermediate level i, the transition probability is quite small. Calculation shows that $|a(t)|^2 \approx f(E)^4$, so a very strong incident excitation is necessary for the observation of two-photon transitions, and thus the experimental investigation of this interesting phenomena in the spectra of atoms and molecules had to await the advent of lasers. Furthermore, the frequency of the laser must be adjustable if the two-photon transition occurs between sharp energy levels and no accidental coincidences between the laser frequency and the energy separation exists. It is, therefore, understandable that two-photon spectroscopy could not fully develop until high power tunable dye lasers became available.

The first observation of two-photon transitions was on atomic C_s (Ref. 28). With the development of tunable dye lasers it was not long before two-photon transitions were observed in molecular systems (Refs. 29-33), both in the gas and crystalline phases. Hampf, et al. (34) have used two tunable dye lasers with different wavelengths and polarizations, synchronized to produce a two-photon spectrum of benzene in the gas phase. Resolved single vibronic level fluorescence following two-photon excitation of benzene vapour has been used (Ref. 35) to confirm earlier work of Hochstrasser, et al. (29-31).

Two-photon sequential absorption spectroscopy as applied to the I_2 molecule has been described by Danyluk and King (36). It is apparent that this method has some advantages over the usual double-photon spectroscopy. It is more selective and produces much simpler spectra. Also as will be seen later, the two laser beams used in the experiment can be propagated in opposite directions through the absorption cell, so that the residual Doppler broadening is proportional to the difference in frequency between them, and consequently high resolution can be achieved.

Twarowski and Kliger (37) have used the technique of thermal blooming to observe the two-photon absorption spectrum of liquid benzene. This work seems to establish the ordering of the states in benzene as $^1B_{2u} < {}^1B_{1u} < {}^1E_{1g}$ (Rydberg) $< {}^1E_u < {}^1E_{2g}$. The authors modestly suggest the interesting acronym of MASTER spectroscopy for this technique; this being derived from the description Multiphoton Absorption Spectroscopy from Thermal Effects of Radiation.

The absorption of two microwave photons of the same frequency was first observed by Oka and Shimizu (38). The effect was first observed for the molecule CD_3CN and PF_3.

A further interesting example of two-photon absorption is the work of Oka and Shimizu (39) on the infra-red microwave two-photon transitions in NH_3. In this work a tunable frequency of microwave radiation was added to a fixed frequency of laser radiation utilizing the nonlinearity of the molecular absorption.

Later work by Oka, et al. (40) has led to the observations of infra-red radio frequency two-photon and multiphoton Lamb-dips in CH_3F which are caused by multiphoton processes. This method is obviously of significance for further ultra-high resolution spectroscopy of complex molecules.

Doppler free two-photon processes. An atom of molecule moving with velocity $\underline{v}$ and and absorb radiation of frequency ω has a Doppler shift of $\omega_0 = \omega \pm \underline{k}\underline{v}$. It is known that for Raman scattering, which is a special type of two-photon process, that the Doppler broadening is less for the forward scattering than for the backward scattering. Chebotayev, et al. (41) proposed a method for eliminating the Doppler broadening in two-photon spectroscopy. This involved the two photons being used in a counterlinear absorption. The consequences of this are indicated in Fig. 6. Experimental demonstrations of this was first given by Cagnac, et al. (42). Doppler-free spectra attainable with two and multiphoton has great potential in the field of molecular spectroscopy. Cagnac, et al. (43) have also reported the observation of a three-photon Doppler-free spectrum. The first application to complex molecules was the detection of two-photon infra-red absorption in CH_3F by Bischel, et al. (44,45).

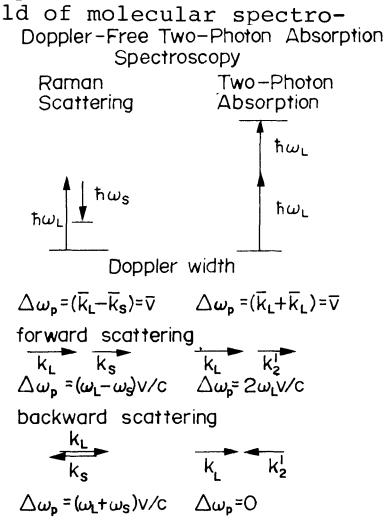

Fig. 6 Comparison of the energy and momentum relations for Raman and two-photon absorption processes

Multiphoton dissociation processes. The discovery that molecules could undergo multiphoton absorption of infra-red radiation from a high powered TEA carbon dioxide laser was one of the most exciting events in Physical Chemistry in recent years (Refs. 46,47). That this multiphoton absorption leads to dissociation and that the process is photo-selective has heightened the interest in these studies. Thus these powerful CO_2 lasers offer the possibility of controlling the specificity of chemical reactions by choosing the energy of the laser beams so as to cause the dissociation of particular bonds. More attractive is that it has been shown (Refs. 48,49) that isotopic enrichment can be achieved by the laser dissociation of polyatomic molecules like BCl_3, SF_6, O_sO_4, MoF_6, etc.

Kompa, et al. (50) have used this method to synthesize isosaborane ($B_{20}H_{16}$) from diborane, and carried out other similar reactions. Other work on photodecomposition and photosynthesis of complex molecules has been extensively persued by Ambartzumian, et al. (51).

The molecule most extensively studied has been SF_6 and there is as yet no agreement as to the exact mechanism of the photo induced dissociation. Amongst many other studies we may mention that crossed molecular and CO_2 laser beams have been used to study the collisionless multiphoton dissociation of SF_6 (Ref. 52). These authors established that the molecule does accumulate energy by sequential absorption of photons and were able to elucidate many of the details of the mechanism. An interesting and detailed theoretical discussion has been given by Mukamel and Jortner (53). A schematic quantum energy diagram based on their work is given in Fig. 7. The energy levels in Fig. 7 are divided into three groups denoted by the Roman numerals. Region I is

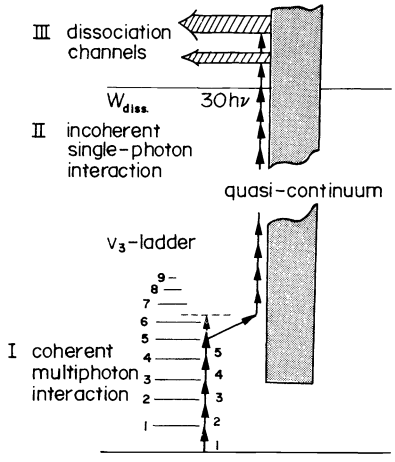

Fig. 7 A schematic energy-level diagram for the multiphoton dissociation of SF_6.

characterized by coherent interaction, discrete energy levels, the anharmonicity 'bottleneck', isotopic selectivity and resonant enhanced multiphoton absorption. Region II is characterized by incoherent simple-photon interactions. Region III is the true continuum of levels above the dissociation limit. A detailed consideration of this model by Black, et al. (54) shows that the collisionless multiphoton dissociation of SF_6 is a statistical thermodynamic process. The standard Rice-Ramsberger-Kassel-Marcus theory of unimolecular reactions provides a quantitative explanation of the dissociation.

Multiphoton Ionizations. (a) Multiphoton ionization processes in atoms. Multiphoton ionizations of atoms and molecules have been observed and these studies are likely to be of considerable importance. The wavelength dependence of the multiphoton ionization cross sections near the resonance threshold can be studied in detail by the use of tunable dye lasers. This type of study was first proposed by Ambartzumian, et al. (47,55) who were able to achieve selective two step ionization of rubidium atoms using a ruby-pumped dye laser and a doubled ruby laser radiation. Later, similar experiments were performed on caesium atoms by Popescu, et al. (56). They observed two-photon transitions from the $6^2S_{\frac{1}{2}}$ ground state to resonant n^2D and n^7S intermediated states, followed by either association ionization or by association followed by dissociative attachment. In addition, direct three-photon ionizations were also observed. Figure 8 shows an energy level diagram for the Cs atoms and indicates the multiphoton ionization processes. The two-step photoionization of sodium atoms was studied by Duong, et al. (57). These authors used a dye laser and radiation from a mercury vapour lamp to ionize the atoms. The method was used to detect optical resonances with a resolution of about 50 MHz.

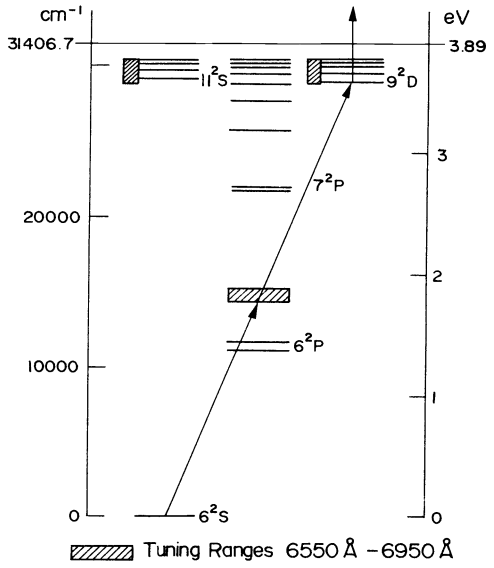

Fig. 8 Energy-level diagram of the states of atomic Cs relevant to three-photon photoionization over the 6550-6950 Å range of wavelengths covered in this experiment.

Two-photon ionization probabilities for atomic caesium have been measured at nine wavelengths of an Argon ion laser by Granneman and Van der Wiel (58). Hurtst, et al. (59) have studied the two-photon ionization of helium (2'S) atoms using a dye laser. The selective photoionization of uranium atoms has been studied in detail by Tuccio and co-workers (60). This may form the basis of a method for the separation of uranium isotopes and is thus of considerable industrial interest. The two-photon ionization is performed using a xenon laser operating at 3781 Å uranium atoms are excited from a metastable state 620 cm^{-1} above the ground state, to an energy level at 27,068 cm^{-1}, approximately one-half of the ionization energy. Excited atoms are then ionized using a krypton laser operation at 3507 Å and 3564 Å.

Ionization has also been observed in the case of calcium atoms following two-photon absorption to the bound, even-parity J=0 and J=2 states (Ref. 61). These authors used a nitrogen-laser-pumped dye laser to excite and ionize atoms in calcium vapour.

(b) Multiphoton ionization of molecules. The application of the multiphoton ionization technique to molecular systems promises to be of interest not only because by that means we can obtain more accurate values for the ionization potential of molecules, but also because it presents us with the possibilities of obtaining more accurate and precise photoionization cross-section data. It also gives us a method to study the energy levels of molecular ions with high accuracy. Moreover, as we shall see, it has opened up the possibilities of enhancing the resolution of molecular photoelectron spectroscopy.

The first report of a multiphoton ionization in a molecule was the observation of resonant two-photon photodetachment of electrons from the C_2^- reported by Lineberger and Patterson (62). These workers used a tunable dye laser to

photodetach electrons from framed mass-analysed beam of C_2^- ions. From their results they were able to show that the ground state of the C_2^- ion was a $^2\Sigma_g$ state. The technique employed can obviously be applied to many molecular positive ions, as well as negative ions, provided that single photon photodissociation from the lower (ground) state is energetically impossible.

A somewhat similar technique was used by Johnson to study multiple photoionization processes in benzene (Ref. 63) and trans-1,3-butadiene (Ref. 64). In the case of benzene a resonance seen in the multiphoton ionization spectrum at 391.4 nm was identified as a two-photon resonance with a bound state of symmetry E_{2g} as indicated by an active e_{2g} vibration. Three-photon resonances with various Rydberg states were also observed. Thus both three- and four-photon ionization processes were found in this study. Laser studies by Arikawa, Shindo and Izawa (65), using a crossed beam apparatus, confirmed the above observations and showed that the two-photon absorption was to the E_{2g} state the only one allowed by the symmetry (even parity) selection rate.

In the case of trans-1,3-butadiene again many three-photon resonances with various Rydberg states were found; these correspond to four-photon ionizations.

Three-photon ionizations of molecular iodine I_2, with resonance in an intermediate state excited by two-photons has been studied in some detail by Dalby and co-workers (66,67). These workers use an ionization cell to detect the photo ions and photoelectrons and obtain high resolutions, photoelectron and photoionization spectra of the iodine molecule. This work demonstrates the importance and power of multiphoton molecular photoelectron spectroscopy.

A two step photoionization of formaldehyde (H_2CO) molecules has been reported (Refs. 68,69). It takes place by the simultaneous action of a radiation pulse of a N_2-laser (λ = 3371 Å), which excites the $^1A_2$ state of the H_2CO and of a H_2-laser (λ = 1600 Å) which photoionizes the excited $^1A_2$ molecules. This method of selective photoionization through an intermediate electron state has many possible applications. A tunable dye laser could be used to populate particular states of molecules from which photoionizations may be induced by radiation from a second laser. This could be the basis of an extremely sensitive and selective photoionization mass spectrometric method. It could also be used to provide very high resolution molecular photoelectron spectra. By making use of the possibility of Doppler-free two or three photon processes leading to ionization, it may be possible to observe extremely high resolution photoionizations and photoelectron spectra of molecules. It has also been suggested that by the use of a tunable IR laser it should be possible to carry out the selective detection of complex molecules because the two-step molecular ionization could involve intermediate vibrational states (Ref. 70). An interesting and important application of the above techniques has been described by Hurst, et al. (59). These authors used two synchronized pulsed lasers to induce the resonance ionization of caesium atoms. Sensitive ionization counting methods enabled them to detect a <u>single</u> C_s atom even in the presence of 10^{19}, or more, atoms of another kind. This ultra-sensitive method is likely to have many applications in various areas of science and medicine. It may also be of considerable technological importance.

Attention may perhaps also be drawn to a related technique which should be of general applicability. This is the Stark-field induced ionization of high-lying states of atoms which was first applied to sodium by Ducas, et al. (71). The method is quite straightforward and depends on the fact that atoms (or molecules) excited by multiphoton transitions to high Rydberg states can be ionized with high efficiency by the application of an electric field. In most cases quite modest Stark fields of $\sim$500 volts/cm^{-1} are sufficient to cause ionization.

<u>Electron Spectroscopy and Photoelectron Spectroscopy</u>

Many new techniques have been introduced to the area of Electron and Photoelectron Spectroscopy which have led to experimental results not previously available because of limitations of wavelength, or radiation intensity. The recent developments in the design of electron energy analysers have increased markedly the resolution of spectrometers. In addition, many new and more sensitive detectors have been developed (Ref. 72). These two factors have meant that more detailed high resolution photoelectron and electron spectra can now be obtained on a more or less routine basis in many laboratories.

<u>Photoelectron spectroscopy</u>. With regard to radiation sources for photoelectron spectroscopy, there have also been many developments. In the case of u.v. photoelectron spectroscopy, as we have mentioned earlier, the intro-

duction of lasers has not only permitted the development of Laser Detachment Spectroscopy, of which we shall say something later, but quite recently the use of multiphoton techniques points the way to the possibility of obtaining quite high resolution spectra, particularly if two or more lasers are used in a counter-linear fashion to remove Doppler broadening. Synchrotron radiation sources are now commonly used for photoelectron spectroscopic studies in the VUV and every X-ray region and have opened up a whole new aspect of this form of electron spectroscopy (Ref. 73).

The application of photoelectron spectroscopic techniques to the study of surfaces has been most fruitful in that it has, together with LEED and Auger spectroscopic studies, completely revolutionalized the whole of surface chemistry and physics. Photoelectron emission studies on organic crystals has also been an interesting field in recent years (Ref. 74), which has given much new knowledge concerning the catalytic activity of organic semiconductors.

As mentioned earlier, the application of photoelectron spectroscopy continues to be most important in the study of molecular structure and related phenomena. The field is too active to be surveyed fully here, and so one can only mention a few areas in which significant advances have been made recently, and from which developments it is likely that new information will continue to come forth.

Recent work on the X-ray photoelectron spectroscopy of metal compounds has shown that satellite phenomena is quite general (Refs. 75,76,77). There have been developed, several theories to explain the results, and it now seems clear that not only does metal-ligand but also ligand-metal transfer processes also occur. The general principles of shake-up and shake-off phenomena are becoming clear. In the case of X-ray photoelectron spectra of simpler substances, we may mention the rather interesting and detailed study of the M_1 and M_3 levels in bromine and krypton. Svensson, et al. (78) also studied the $M_1M_{2,3}$ and $M_{2,3}$ super Coster-Kronig transitions for these and also for chlorine. Several discrete configuration interaction resonances were observed and the occurrence of these was reflected in the lifetime broadening of the lines in the spectra.

The power of recent high resolution studies is perhaps best seen in the work of Karlsson, et al. (72) who reported on the He(I) photoelectron study of the valence electron spectra of C_6H_6, and the hexafluorides of sulphur, molybdenum, tungsten, uranium and SiF_4 (Ref. 79). They obtained high resolution for benzene comparable with the work reported earlier by Åsbrink, et al. (80). An interesting recent high resolution analysis of the He(I) photoelectron spectrum of HCN has been reported by Friedh and Åsbrink (81).

Gas phase X-ray photoelectron spectroscopy has continued to be a fruitful area of investigation and amongst recent studies which show the power of this method when combined with detailed theoretical calculations as a way to reveal the electronic structure of many molecular systems. Examples of recent studies carried out in this way are given in Refs. 82-84.

U.V. photoelectron spectroscopy (Ref. 85), as has been mentioned, has continued to be a method which yields considerable important information about the electronic structures of molecules. There has recently been much interest in the application of this method to the study of conformational problems, to monomer-dimer equilibria, to transient molecules and free radicals. A good example of one of these topics is the recent detailed studies of the He(I) photoelectron spectra of NO_2 and N_2O_4 (Refs. 86,87). In the case of the study of transient molecules and free radicals, this area has developed so rapidly, and the number of species which have recently been investigated is so large, that it is impossible to describe the work in any detail here. We shall perhaps do best by simply referring to our own recent work on the diazine molecule N_2H_2 (Ref. 88). One facet of the well resolved spectrum of this molecule is shown in Figs. 9 and 10. We show this to illustrate the detailed resolution which can be obtained in the photoelectron spectra of transient species using modern techniques. It also serves as an example of the interesting interplay between experiment and recent developments in theoretical chemistry studies of the electronic structure of molecules. It is well known that calculations utilizing Koopman's Theorem are not always applicable to the interpretation of the photoelectron spectra of many compounds. The difficulties in the application of Koopman's Theorem and the calculation of the expected theoretical photoelectron spectra of a

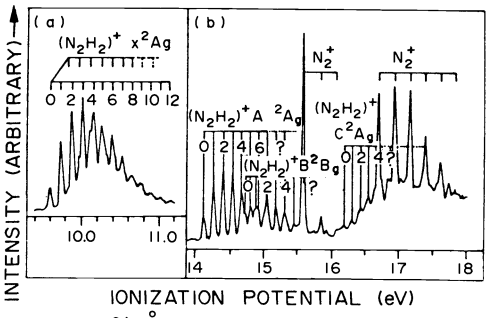

Fig. 9 The 584 Å photoelectron bands of N_2H_4 in detail.

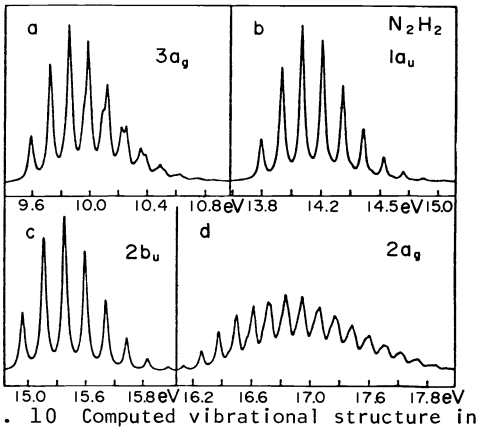

Fig. 10 Computed vibrational structure in the first four bands of *trans*-HNNH.

given molecule have largely been overcome by recent developments in theoretical chemistry. One of these, and the most extensive, is the Green's Function Method largely developed by Cederbaum, et al. (89-92). The other method which relies on third order perturbation theory calculations (Ref. 93) is most successful when applied to small molecules. Figures 9 and 10 show excellent agreement between the experimental spectrum and the theoretically calculated spectra of N_2H_2, and is a nice illustration of how far these newer theoretical methods have developed. They have, in fact, become the preferred method for interpreting the detailed structure of well resolved photoelectron spectra.

Perhaps the most interesting and exciting development in photoelectron spectroscopy in the past few years has been the use of dye-lasers in the study of photodetachment from negative ions. This work has largely been developed by Lineberger and his colleagues, and has, in fact, opened up a new field of spectroscopy. The amount of detailed information which has been obtained by this novel technique would have been unimaginable some five years ago. Because of these new studies, we now have extremely accurate values for the electron affinities of a vast number of atomic (Ref. 94) and molecular negative ions (Refs. 95-97).

In addition, it has been possible to obtain other important structural details about molecular negative ions which could not be got by any other experimental method available at present. An interesting recent development has been the observation of window (Fano) resonances in the photodetachment processes from C_S^- and Rb^-. In both cases, the photodetachment cross section exhibits a sharp minimum at a certain frequency which corresponds to very weak absorption by the negative ion concerned. In the case of caesium, a deep second minimum occurs due to excitation of a second autodetaching state.

Electron spectroscopy. As mentioned above, developments in experimental methods, and in particular in the design of electron energy analysers, has led to the marked improvement of the resolution of electron impact spectrometers. In the more recent developments in this field, many new types of experiments have become possible and these have led to much valuable information concerning the electronic structure of molecules, molecular ions, and in particular, the details of inner-shell ionization phenomena.

The most direct of these newer methods is called Electron Energy Loss Spectroscopy (EELS). The basis of this type of study lies in the application of the Bethe Theory, using the Born approximation, to electron-atom or electron-molecule collisions. If we consider the process $e + M \rightarrow M^+ + 2e$, we can write the differential cross section $d\sigma$ as a function of the scattering angle Ω as $\frac{d\sigma}{dr} = \frac{2}{E}\frac{k_n}{k_o}\frac{1}{K^2}\frac{df(k)}{dE}$ from which it can readily be shown that $\frac{d\sigma}{d\theta} = \frac{2}{E}\frac{k_n}{k_o}\frac{1}{K^2}\frac{df_o}{dE} = \frac{2}{E}\frac{k_n}{k_o}\frac{1}{K^2}\frac{m_c}{\pi e^2 h}\sigma_{photons}$. Therefore, using fast electrons at the optical limit (i.e., $K^2 \rightarrow 0$), it becomes possible to have what is called "spectroscopy in the dark", i.e., to make quantitative "optical" measurements in which the energy loss simulates the "photon" energy. At low electron impact energy and large scattering angles, the momentum transfer is large and non dipole (i.e., optically forbidden) transitions dominate the spectrum.

In particular, Brion, et al. have developed a variety of electron impact coincidence experiments which simulate photoionization mass spectrometry and photoelectron spectrometry. With these new developments they have been able to obtain, via the Bethe-Born relation, partial photoionization cross-sections, branching ratios and photoionization efficiencies for a number of molecules (Refs. 98,99). Brion and his colleagues have developed a new (e,2e) ionization method which makes use of coincidence detection and energy analysis of the two electrons. In this method the cross-section σ, is determined as a function of the scattering angle ϕ, by the coincident count rate and thus gives a direct measurement of the momentum distribution of the ionized electron. This is potentially a most important new development since it enables one to probe the spacial distribution of the orbital wavefunction of a molecule, and determines the order and symmetry of the orbitals. It also permits the measurement of the binding energies corresponding to single and multiple electron ionization processes (Ref. 100).

Laser magnetic resonance spectroscopy

The general technique of laser magnetic resonance is very similar to other magnetic resonance methods such as electron paramagnetic resonance or nuclear magnetic resonance. As is well known, NMR uses radio frequency radiation to produce transitions between nuclear spin levels, and EPR uses microwave radiation to produce transitions between electron spin levels, in laser magnetic resonance radiation (Refs. 101,102) from infra-red lasers is used to produce transitions between rotational levels in paramagnetic atoms or molecular species such as free radicals. Absorption of the laser radiation photons is accomplished by tuning the paramagnetic molecular rotational levels with resonance by varying an applied magnetic field.

A simplified rotational energy level diagram which illustrates the principles of laser magnetic resonance absorption is shown in Fig. 11. Note that not all the levels which arise from Λ doubling and nuclear spin are shown. The near coincidence of the laser photon E_L with the field free rotational transition $E(J=5/2 \leftarrow J=3/2)$ is shown on the left.

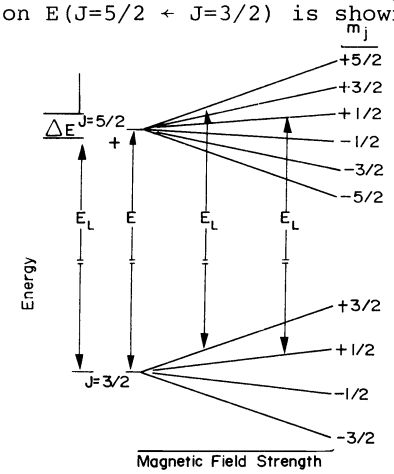

Fig. 11 Rotational energy level diagram showing near coincidence of laser line E_L with rotational transition $E(J=5/2 \leftarrow J=3/2)$.

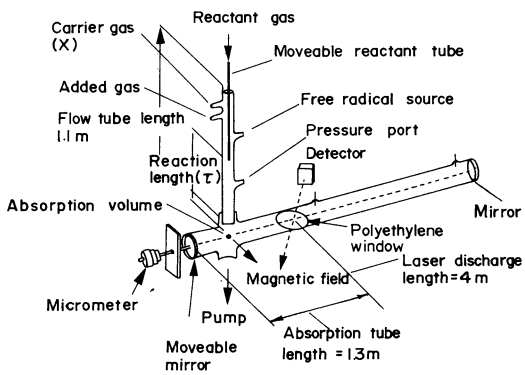

Fig. 12 Schematic diagram of laser magnetic resonance apparatus.

To the right of Fig. 11 (Fig. 12), is a sketch of the apparatus used for the observation of the laser magnetic resonance spectra of paramagnetic species and free radicals generated by chemical reaction in a flow system. Other methods such as a microwave discharge or photolysis can be used to generate the free radicals required for particular studies.

What is of great interest is the enormous sensitivity which this method presents for the study of the details of the rotational fine structure of free radicals and atoms. Because of the great increase in the availability of infra-red lasers covering quite a range of frequencies, the method has become a most powerful spectroscopic technique which will obviously continue to be of considerable importance in the structural studies on free radicals in the gas phase (Refs. 103,104). It has also been shown to be of much promise for the measurement of gas phase free radical reaction rates. In particular, it has been used by Howard and Evenson (105) to measure the rates of the reaction of the OH radical with CO, NO, and NO_2 296°K and over

a pressure range of 0.4-5 torr. More recently it has proved to be satisfactory for the measurement of the rates of reaction of the NO_2 radical with HO and O atoms (Ref. 106). This is a most important chemical reaction in the upper atmosphere and is of considerable importance in the sequence of reactions which are involved in the expected depletion of stratospheric ozone by nitrogen oxides released by high flying aircraft, and by chlorine species from the photodecomposition of halocarbons.

Acknowledgement - We wish to thank the National Research Council of Canada for financial support for some aspects of the work described in this paper.

REFERENCES

1. C.F. Bander, P.K. Bearson, S.V.-O'Neil and H.F. Schaefer, J. Chem. Phys. 56, 4624 (1972); J.C. Polanyi and J.L. Schreiber, Disc. Farad. Soc. 62, 267 (1977).
2. J.M. Farrar and Y.T. Lee, J. Chem. Phys. 63, 3639 (1975).
3. M.J. Berry, J. Chem. Phys. 59, 6229 (1973); J.C. Polanyi and K.B. Woodall, J. Chem. Phys. 57, 1574 (1972).
4. J.J. Valenti, M.J. Coggiola and Y.T. Lee, J. Amer. Chem. Soc. 98, 853 (1976).
5. J.M. Farrar and Y.T. Lee, J. Amer. Chem. Soc. 96, 7570 (1976).
6. T.J. Chuang, G.W. Hoffman and K.B. Eisenthal, Chem. Phys. Lett. 25, 201 (1974).
7. T.J. Chuang and K.B. Eisenthal, J. Chem. Phys. 62, 2213 (1975).
8. G.R. Fleming, J.M. Morris and G.W. Robinson, Chem. Phys. 17, 91 (1976).
9. K. Kaufmann, P.C. Dutton, T.C. Netzel, J.S. Leigh and P.M. Rentzopis, Science 188, 1301 (1975).
10. E.L. Hahn, Phys. Rev. 70, 460 (1946).
11. H.Y. Carr and E.M. Purcell, Phys. Rev. 94, 630 (1954).
12. S. Meiboom and D. Gill, Rev. Sci. Instrum. 29, 688 (1958).
13. E.A. Andrew, Y. Apaydin and W.S. Moore, Phys. Lett. 25A, 44 (1967).
14. J.S. Waugh, L.M. Huber and U. Haeberlen, Phys. Rev. Lett. 20, 180 (1968).
15. A. Pines, M.G. Gibby and J.S. Waugh, J. Chem. Phys. 56, 1776 (1972); 59, 569 (1973).
16. U. Haeberlen, U. Kohlschutte, H.W. Spiess and H. Zimmerman, Chem. Phys. 3, 284 (1974); 4, 269 (1974). Proceedings XIXth Congress Ampere, Heidelberg, p. C11 (1976).
17. S. Vega, T.W. Shattuck and A. Pines, Phys. Rev. Lett. 37, 43 (1976); S. Vega and A. Pines, J. Chem. Phys. 62, 5624 (1977).
18. K.M. Evenson, J.S. Wells and H.E. Radford, Phys. Rev. Lett. 25, 199 (1970); H.E. Radford, K.M. Evenson and C.J. Howard, J. Chem. Phys. 60, 3178 (1974); P.B. Davies, D.K. Russell, B.A. Thrush and F.D. Wayne, J. Chem. Phys. 62, 3739 (1975).
19. M.D. Levelson, C. Flytzanis and N. Bloembergen, Phys. Rev. 6, 3962 (1972).
20. W.M. Tolles and R.D. Turner, Applied Spectroscopy, 31, 96 (1977).
21. F. Moya, S.A.J. Drnet and J.P.E. Taran, Laser Spectroscopy, Springer-Verlag, New York, p. 66 (1975).
22. R.J. Butcher, R.B. Dennis and S.D. Smith, Proc. Roy. Soc. 344A, 541 (1975).
23. C.K.N. Patel, R.J. Kerl and E.G. Burkhardt, Phys. Rev. Lett. 38, 1204 (1977).
24. J. Häger, W. Hinz, W. Walther and G. Strey, Applied Physics 9, 35 (1976).
25. C.K.N. Patel, App. Phys. Lett. 25, 112 (1974).
26. C.K.N. Patel and R.K. Kerl, App. Phys. Lett. 30, 578 (1977).
27. M.A. Guerra, A. Sanchez and A. Javan, Phys. Rev. Lett. 38, 482 (1977).
28. I.D. Abella, Phys. Rev. Lett. 9, 453 (1962).
29. R.G. Bray, R.M. Hochstrasser and J.E. Wessel, Chem. Phys. Lett. 27, 167 (1974).
30. R.M. Hochstrasser, J.E. Wessel and H.N. Sung, J. Chem. Phys. 60, 317 (1974).
31. R.G. Bray, R.M. Hochstrasser and H.N. Sung, Chem. Phys. Lett. 33, 1 (1975).
32. L. Wunsch, H.J. Neusser and E.W. Schlag, Chem. Phys. Lett. 31, 433 (1975).
33. L. Wunsch, H.J. Neusser and E.W. Schlag, Chem. Phys. Lett. 32, 210 (1975).
34. W. Hampf, H.J. Neusser and E.W. Schlag, Chem. Phys. Lett. 46, 406 (1977).
35. A.E.W. Knight and C.S. Parmenter, Chem. Phys. Lett. 43, 359 (1974).
36. M.D. Danyluk and G.W. King, Chem. Phys. 22, 59 (1977).
37. A.J. Twarowski and D.S. Kliger, Chem. Phys. 20, 259 (1977).
38. T. Oka and T. Shimizu, Phys. Rev. A2, 587 (1970).

39. T. Oka and T. Shimizu, Appl. Phys. Lett. 19, 99 (1971).
40. S.M. Freund, M. Römheld and T. Oka, Phys. Rev. Lett. 35, 1497 (1975).
41. L.S. Vasilenko, V.P. Chebotayev and A.V. Shishaer, Sov. Phys. JETP Lett. 12, 113 (1970).
42. B. Cagnac, G. Grynberg and F. Biraben, J. Phys. (Paris), 34, 56 (1973).
43. G. Grynberg, F. Biraben, M. Bassini and B. Cagnac, Phys. Rev. Lett. 37, 283 (1976).
44. W.K. Bischel, P.J. Kelley and C.K. Rhodes, Phys. Rev. Lett. 34, 300 (1975).
45. W.K. Bischel, P.J. Kelley and C.K. Rhodes, Phys. Rev. A13, 1817 (1976).
46. N.R. Isenor and M.C. Richards, App. Phys. Lett. 18, 225 (1971).
47. R.V. Ambartzumian, V.P. Kalinin and V.S. Letokhov, Soc. Phys. JETP Lett. 13, 217 (1971).
48. R.V. Ambartzumian, V.S. Letokhov, G.N. Makarov and A.A. Puretzkii, Zh. Eksp, Teor. Fiz. 15, 709 (1972); 17, 91 (1973).
49. V.S. Letokhov, Chem. Phys. Lett. 15, 221 (1972).
50. H.R. Bachmann, R. Rinck, H. Nöth and K.L. Kompa, Chem. Phys. Lett. 45, 169 (1977).
51. R.V. Ambartzumian, N.V. Chekalin, V.S. Doljikov, V.S. Letokhov and E.A. Ryabov, Chem. Phys. Lett. 25, 515 (1974).
52. M.J. Coggiola, P.A. Schulz, Y.T. Lee and Y.R. Shen, Phys. Rev. Lett. 38, 17 (1977).
53. S. Mukamel and J. Jortner, J. Chem. Phys. 65, 5204 (1976).
54. J.G. Black, E. Yablonovitch, N. Bloemberger and S. Mukamel, Phys. Rev. Lett. 38, 1131 (1977).
55. R.V. Ambartzumian and V.S. Letokhov, Applied Optics 11, 354 (1972).
56. D. Popescu, C.B. Collins, B.W. Johnson and I. Popescu, Phys. Rev. A9, 1182 (1972).
57. H.T. Duong, P. Jaquinot, S. Liberman, J. Pinard and J.-L. Vialle, C.R. Acad. Sci. Paris, 276, Series B, 909 (1973).
58. E.H.A. Granneman and M.J. Van der Wiel, J. Phys. B, Atom. Molec. Phys. 8, 1617 (1975).
59. G.S. Hurst, M.H. Nayfeh and J.P. Young, Phys. Rev. A15, 2283 (1977).
60. B.B. Suavely, R.W. Solarz and S.A. Tuccio, Laser Spectroscopy, Springer-Verlag, p. 268 (1976).
61. P.E. Sherick, J.A. Armstrong, R.W. Dreyfus and J.J. Wynne, Phys. Rev. Lett. 36, 1296 (1976).
62. W.C. Lineberger and T.A. Patterson, Chem. Phys. Lett. 13, 40 (1972).
63. P.M. Johnson, J. Chem. Phys. 64, 4143 (1976).
64. P.M. Johnson, J. Chem. Phys. 64, 4638 (1976).
65. Studies of Atomic Collisions and Related Topics in Japan, Tokyo, 95 (1977), Progress Report No. 3; T. Arikawa, S. Shindo, paper 6A613 this congress.
66. G. Petty, C. Tai and F.W. Dalby, Phys. Rev. Lett. 34, 1207 (1977).
67. F.W. Dalby, G. Petty, M.H.L. Pryce and C. Tai, Can. J. Phys. 55, 1033 (1977).
68. R.V. Ambartzumian and V.S. Letokhov, Applied Optics, 11, 354 (1972).
69. S.V. Andreyev, V.S. Antonov, I.N. Kuyazev and V.S. Letokhov, Chem. Phys. Lett. 45, 166 (1977).
70. V.S. Letokhov, Uk. Fiz. Nauk. 118, 119 (1976).
71. T.W. Ducas, M.G. Lettman, R.R. Freeman and D. Kleppner, Phys. Rev. Lett. 35, 366 (1976).
72. L. Karlsson, L. Mattsson, R. Jadrny, T. Bergmark and K. Siegbahn, Physica Scripta 14, 230 (1976).
73. P. Pianetta and I. Lindau, J. Elect. Spectr. 11, 13 (1977).
74. H. Inokuchi, Discus. Faraday Soc. 51, 183 (1971).
75. A. Rosencwaig, G.D. Wertheim and H.J. Guggenheim, Phys. Rev. Lett. 27, 479 (1971).
76. D.C. Frost, A. Ishitani and C.A. McDowell, Mol. Phys. 24, 861 (1972).
77. S. Larrson, J. Elect. Spectr. 8, 171 (1976).
78. S. Svensson, N. Martensson, E. Basilier, P.A. Malmquist, U. Gelius and K. Siegbahn, Physica Scripta 14, 141 (1976).
79. R. Jadrny, L. Karlsson, L. Mattsson and K. Siegbahn, Chem. Phys. Lett. 49, 203 (1977).
80. L. Åsbrink, E. Lindholm and O. Edgwist, Chem. Phys. Lett. 5, 609 (1970).
81. C. Friedh and L. Åsbrink, J. Elect. Spectr. 7, 119 (1975).
82. M.S. Banna, D.C. Frost, C.A. McDowell and B. Wallbank, J. Chem. Phys. 66, 3509 (1977).
83. C.R. Brundle, N.A. Kuebler, M.R. Robin and H. Basch, Inorg. Chem. 11, 20 (1972).
84. W.R. Salaneck, J.W. Lin, A. Paton, C.B. Duke and G.P. Ceasar, Phys. Rev. B13, 4517 (1976).

85. D.W. Turner, C. Baker, A.D. Baker and C.R. Brundle, Molecular Photoelectron Spectroscopy, Wiley-Interscience, London (1970).
86. D.L. Ames and D.W. Turner, Proc. Roy. Soc. 348A, 175 (1976).
87. D.C. Frost, C.A. McDowell and N.P.C. Westwood, J. Elect. Spectr. 10, 293 (1977).
88. D.C. Frost, S.T. Lee, C.A. McDowell and N.P.C. Westwood, J. Chem. Phys. 64, 4719 (1976).
89. L.S. Cederbaum and W. Domcke, J. Chem. Phys. 60, 2878 (1974).
90. L.S. Cederbaum and W. von Niessen, Chem. Phys. Lett. 24, 263 (1974).
91. L.S. Cederbaum, G. Hohlneicher and W. von Niessen, Mol. Phys. 26, 1405 (1973).
92. L.S. Cederbaum, W. Domcke and W. von Niessen, Chem. Phys. 10, 459 (1975).
93. D.P. Chong, F.G. Herring and D. McWilliams, Chem. Phys. Lett. 25, 568 (1977); J. Chem. Phys. 61, 3567 (1974).
94. H. Hotop and W.C. Lineberger, J. Phys. Chem. Ref. Data 4, 539 (1975).
95. W.C. Lineberger and B.W. Woodward, Phys. Rev. Lett. 25, 424 (1970).
96. H. Hotop, T.A. Patterson and W.C. Lineberger, Phys. Rev. A8, 762 (1973).
97. A. Kasdan, E. Herbst and W.C. Lineberger, Chem. Phys. Lett. 31, 78 (1975).
98. C.E. Brion, A. Hamnett, G.R. Wight and M.J. Van der Wiel, J. Elect. Spec., submitted 1977.
99. S.T. Hood, A. Hamnett and C.E. Brion, Chem. Phys. Lett. 41, 428 (1976).
100. S.T. Hood, A. Hamnett and C.E. Brion, J. Elect. Spec. 11, 205 (1977).
101. J.S. Wells and K.M. Evenson, Rev. Sci. Instrum. 41, 226 (1970).
102. H.E. Radford, K.M. Evenson and C.J. Howard, J. Chem. Phys. 60, 3178 (1974).
103. P.D. Davies, D.K. Russell, B.A. Thrush and E.D. Wayne, J. Chem. Phys. 62, 3739 (1975).
104. P.D. Davies, D.K. Russell, B.A. Thrush and H.E. Radford, Proc. Roy. Soc. A353, 299 (1977).
105. C.J. Howard and K.M. Evenson, J. Chem. Phys. 61, 1943 (1977).
106. J.P. Burrows, G.W. Harris and B.A. Thrush, Nature 267, 233 (1977).